Limited Warranty Terms

Verbatim GmbH warrants this product to be free from defects in material and workmanship for a period of 2 years from date of purchase.

This warranty excludes batteries. If this product is found to be defective within the warranty period, it will be replaced at no cost to you. You may return it with your original cash register receipt to the place of purchase or contact Verbatim.

Product replacement is your sole remedy under this warranty, and this warranty does not apply to normal wear or to damage resulting from abnormal use, misuse, abuse, neglect or accident, or to any incompatibility or poor performance due to the specific computer software or hardware used.

VERBATIM WILL NOT BE LIABLE FOR DATA LOSS OR ANY INCIDENTAL, CONSEQUENTIAL OR SPECIAL DAMAGES, HOWEVER CAUSED, FOR BREACH OF WARRANTIES OR OTHERWISE.

This warranty gives you specific legal rights and you may also have other rights which vary from state to state or country to country.

Note

Verbatim GmbH may at any time revise the content of this user guide without further notice.

Rights

Copyright © 2019 Verbatim GmbH. No part of this document may be reproduced in any form or by any means, for any purpose, without the express written permission of Verbatim GmbH. All rights reserved. All other brands and product names referenced herein are property of their respective owners.

FCC Compliance

This equipment has been tested and found to comply with the limits for a Class B digital device, pursuant to Part 15 of the FCC Rules. These limits are designed to provide reasonable protection against harmful interference in a residential installation.

This equipment generates, uses and can radiate radio frequency energy and, if not installed and used in accordance with the instructions, may cause harmful interference to radio communications. However, there is no guarantee that interference will not occur in a particular installation.

If this equipment does cause harmful interference to radio or television reception, which can be determined by turning the equipment off and on, the user is encouraged to try to correct the interference by one or more of the following measures:

- Reorient or relocate the receiving antenna.
- Increase the separation between the equipment and receiver.
- Connect the equipment into an outlet on a circuit different from that to which the receiver is connected.
- Consult the dealer or an experienced radio/TV technician for help.

WEEE Notice

The Directive on Waste Electrical and Electronic Equipment (WEEE), which entered into force as European law on 13th February 2003, resulted in a major change in the treatment of electrical equipment at end-of-life.

The WEEE logo (shown at the left) on the product or on its box indicates that this product must not be disposed of or dumped with your other household waste. For more information about electronic and electrical waste equipment disposal, recovery, and collection points, please contact your local municipal household waste disposal service or shop from where you purchased the equipment.

CE Declaration

Complied the requirements set out in the Council Directive on the Approximation of the Laws of the Member States relating to Directive 2014/53/EU on The Radio Equipment Directive in addition RoHS Directive 2011/65/EU.

This declaration applies to all specimens manufactured identical to the model submitted for testing/evaluation.

- EN 60950-1:2006+A11:2009+A1:2010+A12:2011+A2:2013
- EN 62311:2008
- ETSI EN 301 489-1 V2.2.0 (2017-03)
- ETSI EN 301 489-3 V2.1.1 (2017-03)
- ETSI EN 303 417 V1.1.1 (2017-09)
- IEC 62321-3-1:2013
- IEC 62321-5:2013
- IEC 62321-4:2013
- IEC 62321-7-1:2015
- IEC 62321-7-2:2017
- IEC 62321-6:2015

Verbatim

QUICK START GUIDE

Power Bank 10000mAh

1907

Pack Contents

- 1 x 10000mAh Power Bank
- 1 x USB-A to Micro B USB Cable
- 1 x Quick Start Guide

Specifications

Model:	49570
Input:	5V / 2A
Output:	5V / 2.1A (Max.)
Dimensions:	130mm (L) x 69mm (W) x 13.5mm (D)
Product Weight:	200±10g
Battery Capacity:	10000mAh/3.7V/37W
Rated Capacity:	6800mAh/5V (TYP 1A)
Storage Temperature:	Max. 45°C

Caution

- Keep away from fire & moisture.
- Keep away from children.
- Do not expose to the elements.
- Do not disassemble or misuse this device.
- Disconnect from power supply when not in use.
- Do not leave the device unused for long periods of time.

Overview

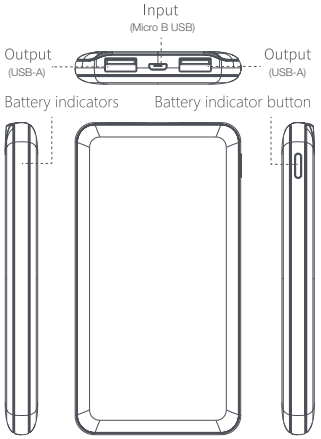

Input:	Self-charging
Output:	For charging digital devices
Battery indicators:	LED indicators to show battery status
Battery indicator button:	Press to check the battery level

Operating Instructions

Charging your Power Bank:

LED will flicker when product is charging. This will stop flickering once charging is complete. Please disconnect Power Bank once charging is complete.

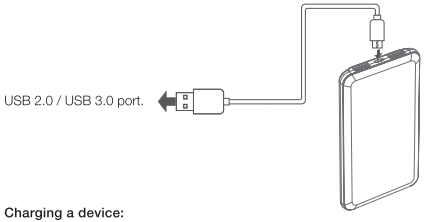

Charging a device:

Once the Power Bank is connected to the digital device, charging will begin.

Flickering LED = charging in process
Solid LED = charging complete

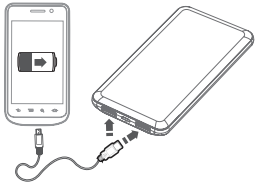

Technical Support

EN If you have any questions about this product, please contact the Verbatim support team – www.verbatim.com/support.

F Si vous avez des questions au sujet de ce produit, contactez l'équipe d'assistance Verbatim à l'adresse www.verbatim.com/support.

DE Wenn Sie Fragen zu diesem Produkt haben, wenden Sie sich bitte an den Verbatim-Support: www.verbatim.com/support.

IT In caso di domande su questo prodotto, contattare il team di supporto Verbatim – www.verbatim.com/support.

ES Si tiene alguna pregunta sobre este producto, póngase en contacto con el equipo de soporte de Verbatim: www.verbatim.com/support.

PT Caso tenha alguma dúvida sobre este produto, entre em contacto com a equipa de apoio da Verbatim - www.verbatim.com/support.

PL W przypadku jakichkolwiek pytań na temat tego produktu prosimy o kontakt z działem wsparcia firmy Verbatim - www.verbatim.com/support.

RU Если у вас есть какие-либо вопросы об этом продукте, обратитесь в службу технической поддержки Verbatim по адресу www.verbatim.com/support.

CZ Máte-li k tomuto produktu nějaké otázky, kontaktujte tým podpory společnosti Verbatim – www.verbatim.com/support.

HU Ha bármilyen kérdése van a termékkel kapcsolatban, kérjük, lépjen kapcsolatba a Verbatim ügyfélszolgálatával: www.verbatim.com/support.

HR/SR z Ukoliko vas zanima bilo šta u vezi ovog proizvoda, obratite se timu za podršku kompanije Verbatim – www.verbatim.com/support.

SK Ak máte ďalšie otázky týkajúce sa tohto produktu, kontaktujte tím podpory spoločnosti Verbatim - www.verbatim.com/support.